SPARE PARTS EXPLODED VIEW
STORAGE ELECTRIC WATER HEATERS

Model

SIMAT EU2

R8217877-02 - 04/07/2017

EN	FR	IT	ES	DE	NL

SIMAT EU2

Storage Electric Water Heaters

Col	Reference	Model type	Begin	End
1	3201333	SIMAT 50 V/2 EU2	07-2017	-
2	3201339	SIMAT 50 V/5 EU2	07-2017	-
3	3201334	SIMAT 80 V/2 EU2	07-2017	-
4	3201340	SIMAT 80 V/5 EU2	07-2017	-
5	3201337	SIMAT 80 VTD/2 EU2	06-2017	-
6	3201338	SIMAT 80 VTS/2 EU2	06-2017	-
7	3201335	SIMAT 100 V/2 EU2	07-2017	-

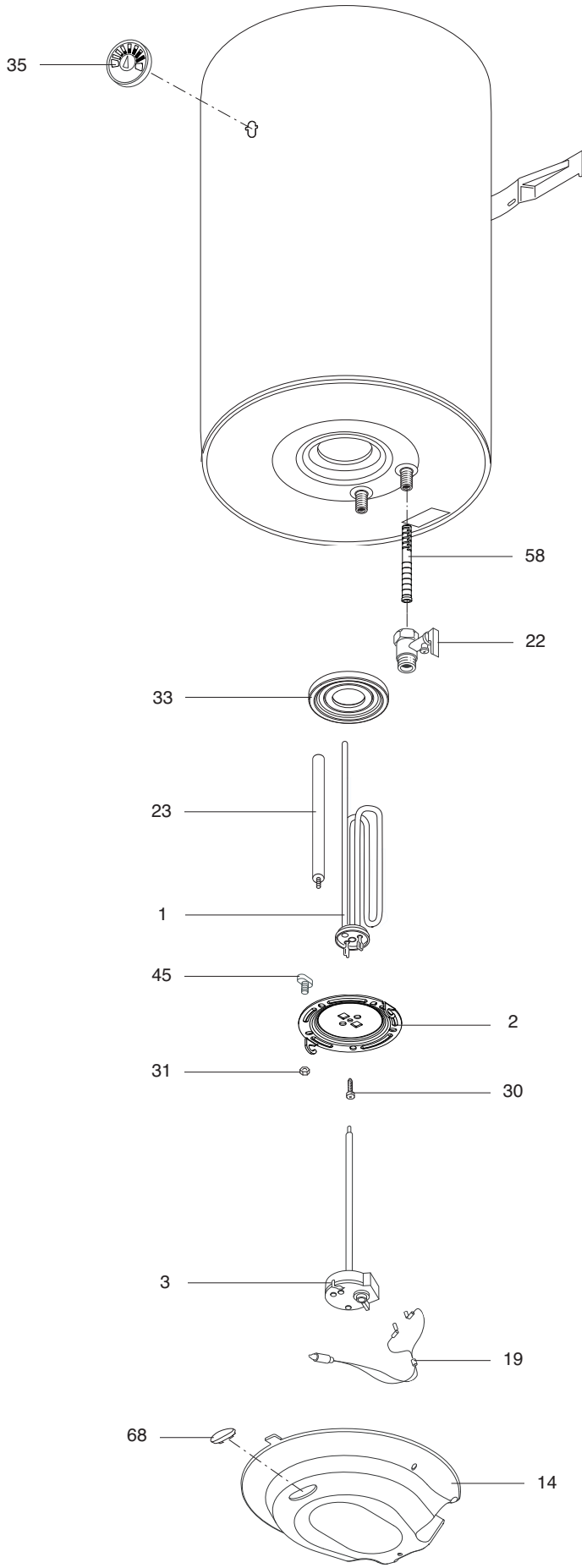
35
58
22
33
23
1
45
2
31
30
3
19
68
14

	Description	Manf. Pt. N	Type	1 SIMAT 50 V/2 EU2	2 SIMAT 50 V/5 EU2	3 SIMAT 80 V/2 EU2	4 SIMAT 80 V/5 EU2	5 SIMAT 80 VTD/2 EU2	6 SIMAT 80 VTS/2 EU2	7 SIMAT 100 V/2 EU2	8	9	10	11	12	13	14	15	16	17	18	From	to
0001	HEATING ELEMENT 1200W 220-240V	65111787						●	●														
	HEATING ELEMENT 1200W 220-240V	65115842		●	●	●	●																
	HEATING ELEMENT 1500W 220-240V	65115422								●													
0002	FLANGE (5 HOLES)	65111789		●	●	●	●	●	●	●													
0003	THERMOSTAT	65115846		●	●																		
	THERMOSTAT	65115847				●	●																
	THERMOSTAT	65115848								●													
	THERMOSTAT	691214						●	●														
0014	PLASTIC COVER + SIGNAL LAMP CAP	65102556		●	●	●	●	●	●	●													
0019	SIGNAL LAMP	993025		●	●	●	●	●	●	●													
0022	SAFETY VALVE WITH LEVER (1/2" 8,5 BAR)	571730		●	●	●	●	●	●	●													
0023	ANODE D:25,5 L:230 M5-M8	993014-01		●	●	●	●	●	●	●													
0030	SCREW M6X12	993000		●	●	●	●	●	●	●													
0031	LOCK NUT M6	994140		●	●	●	●	●	●	●													
0033	FLANGE GASKET	65111788		●	●	●	●	●	●	●													
0035	CIRCULAR THERMOMETER	65110642		●	●	●	●	●	●	●													
0045	SCREW M6X20	65151225-FA		●	●	●	●	●	●	●													
0058	BAFFLE (1/2" H=72)	65113698		●	●	●	●	●	●	●													
0068	SIGNAL LAMP CAP	65112314		●	●	●	●	●	●	●													

LIST OF THE ABBREVIATIONS

HW	:	Hot water.
CW	:	Cold water.
C	:	Ceramic resistance (normal heating).
Ca	:	Ceramic resistance (accelerated heating)
TP	:	Immersion heater.
1F	:	With fittings.
2F	:	Without fittings.
3F	:	With fittings and another outlet connection.
AMI	:	With mixing valve.
SMI	:	Without mixing valve.
PUISS	:	Power of th appliance.
PN	:	Appliance with normal pression.
LP	:	Appliance with low pression.
PV	:	Appliance with variable power.
PF	:	Appliance with fixed power.

IDENTIFICATION PLATE

SERIAL NUMBER

6 Characters : 03 09 08
- Year of manufacture
- Manufacturing day
- Month of manufacture

9 Characters : M 12 10 0606
- Year of manufacture
- Month of manufacture
- Sequencial number

14 Characters : SI-V-0B0 45 07 0001
- Sequencial number
- Year of manufacture : 6 ➞ 2004, 7 ➞ 2005, 8 ➞ 2006, etc ...
- Month of manufacture : 25 ➞ January, 13 ➞ February, 32 ➞ March, 35 ➞ April, 39 ➞ May, 45 ➞ June, 43 ➞ July, 29 ➞ August, 40 ➞ September, 38 ➞ October, 51 ➞ November, 12 ➞ December
- Product model

15 Characters : 02 11 00001 007843
- Year of manufacture
- Month of manufacture
- Code appareil
- Sequencial number

21 Characters : 3200050 XX 08115 0000001
- Sequencial number
- Product reference
- Year (08) / Manufacturing day (115)

22 Characters : 3200050 XX 070115 0000001
- Sequencial number
- Product reference
- Year (07) / Month (01) / Manufacturing day (15)

The indications mentionned on the prices, commercial or technical literature and the scheme are written for your guidance and are available at a given time. The CONSTRUCTOR retains the power to modify the presentation, the form, the size, the conception or the material of the products.